computar

M0814-MP2

f=8mm F1.4
6r 2/3 type Megapixel Cameras
C-Mount

Model No.		M0814-MP2		Effective Lens Aperture	Front	φ21.5mm	
Focal Length		8mm			Rear	φ12.0mm	
Max. Aperture Ratio		1:1.4		Distotion	2/3type	-0.1%(y=5.5)	
Max. Image Format		8.8mm x 6.6mm(φ11mm)			1/2type	-1.1%(y=4.0)	
Operation Range	Iris	F1.4 -F16C		Back Focal Length		13.1mm	
	Focus	0.1m -Inf.		Flange Back Length		17.526mm	
Control	Iris	Manual		Mount		C-Mount	
	Focus	Manual		Filter Size		M30.5 P=0.5mm	
Object Dimension at M.O.D	2/3 type	12.1cm x 9.0cm		Dimensions		φ33.5mm x 28.2mm	
	1/2 type	8.7cm x 6.5cm		Weight		62.6g	
Angle of View	D	2/3 type	67.1°	1/2 type	51.9°		
	H		56.3°		42.5°		
	V		43.7°		32.4°		
Operating Temperature		-10℃ -+50℃					

M.O.D : Minimum Object Distance

Dimensions

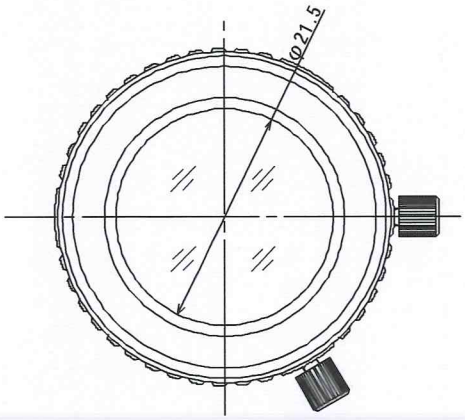

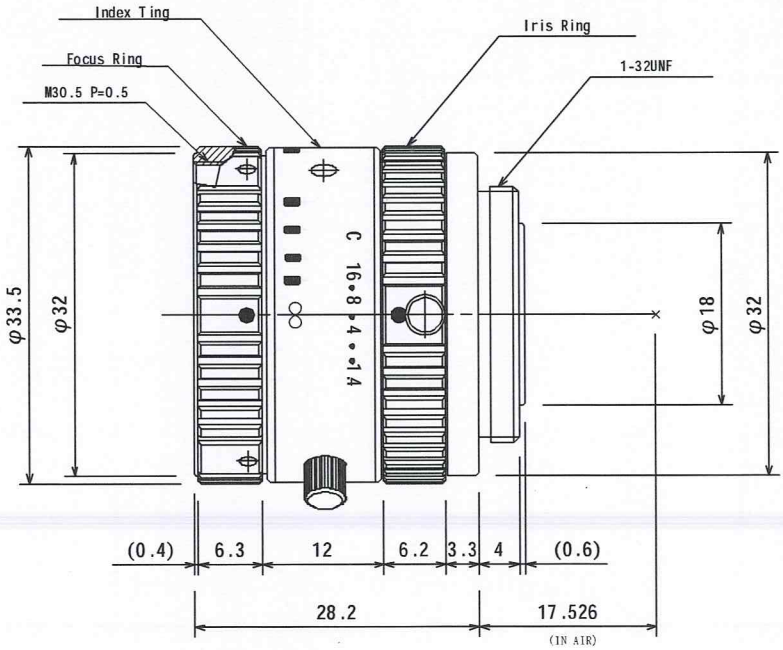

Specification is subject to change without any notice.

2008.05